ARTE LAMP

A8280AP-1CC

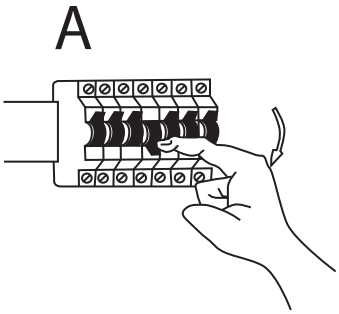

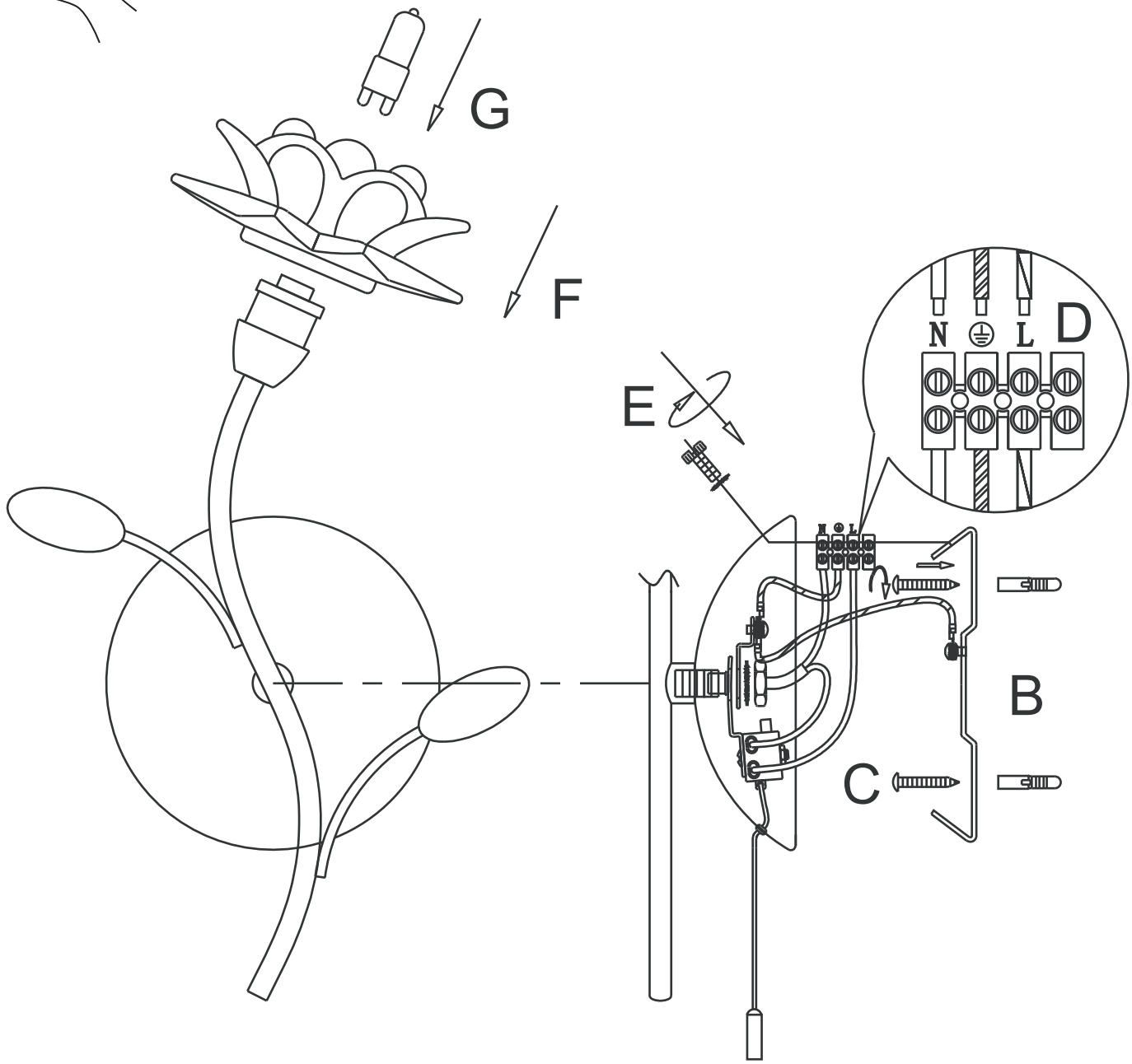

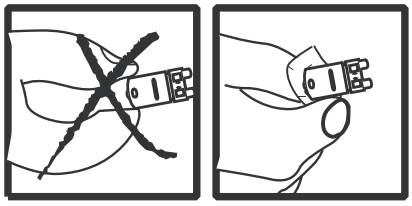

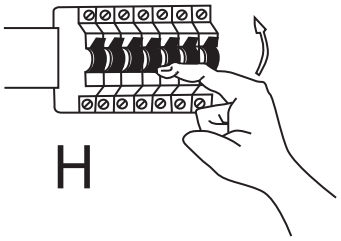

ART000237