ARTE LAMP

A7107AP-1AB, A7107AP-1CC
A7107AP-1SS

A

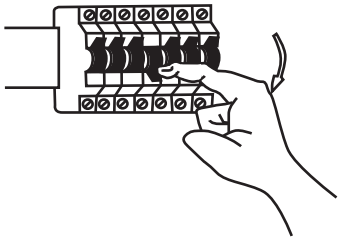

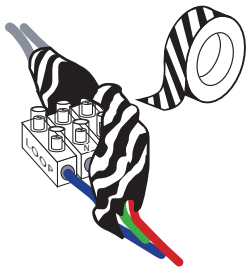

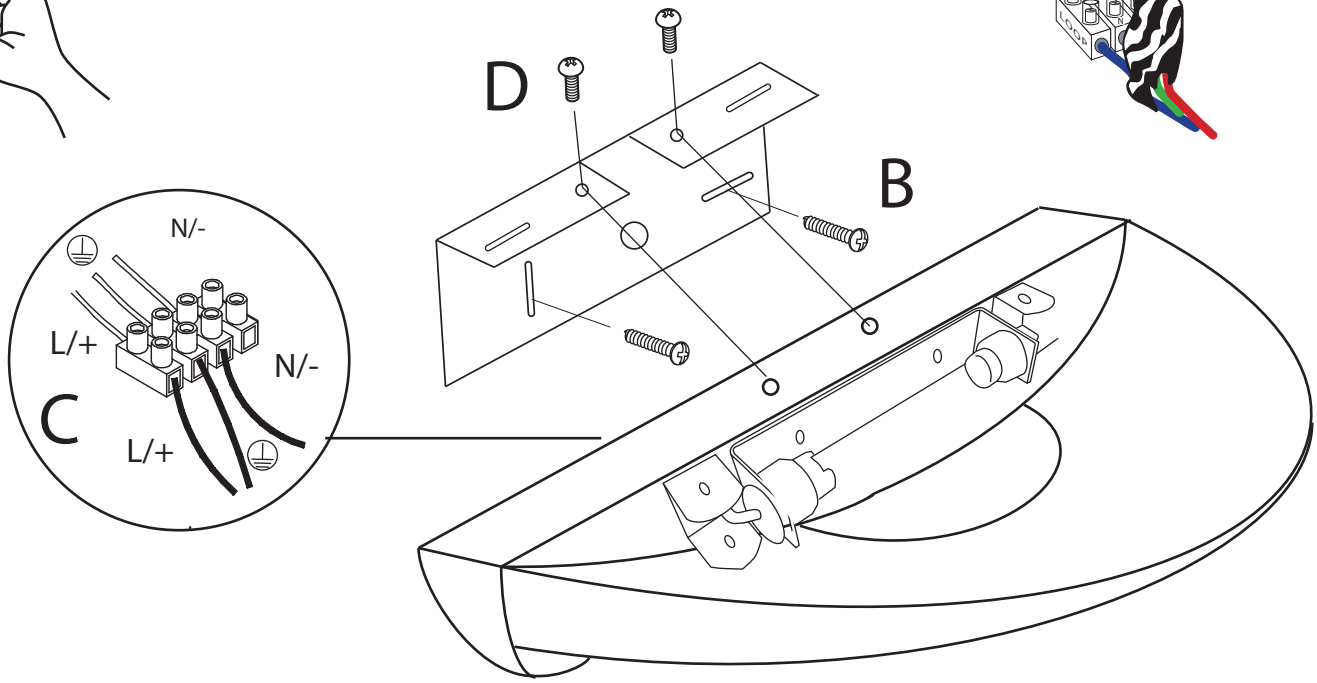

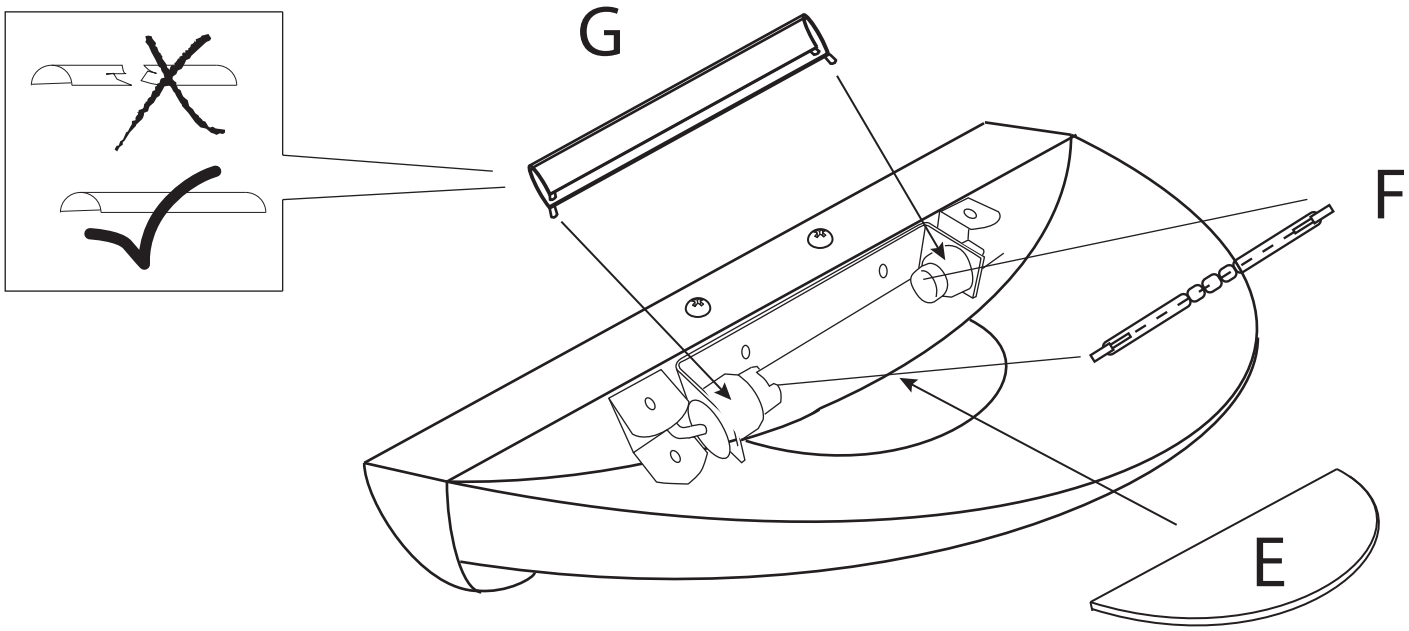

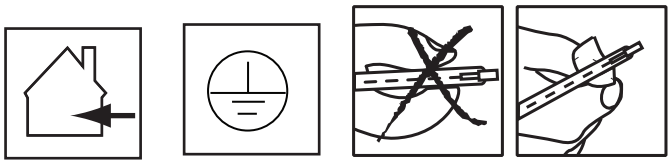

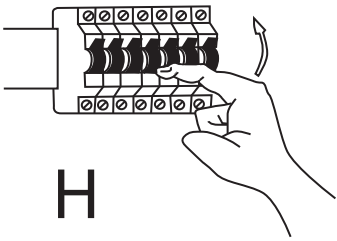

ART000083