ARTE LAMP

ASSEMBLY INSTRUCTION

ИНСТРУКЦИЯ A5380SP-4WH

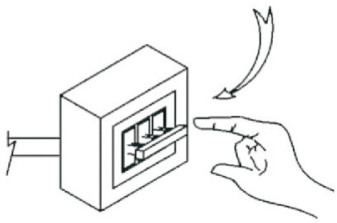

OFF 1

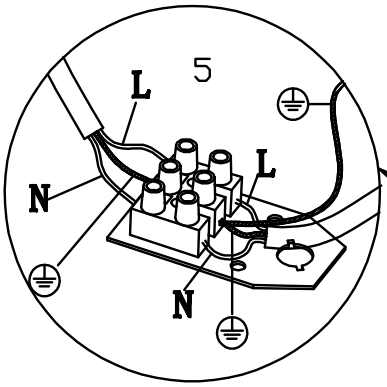

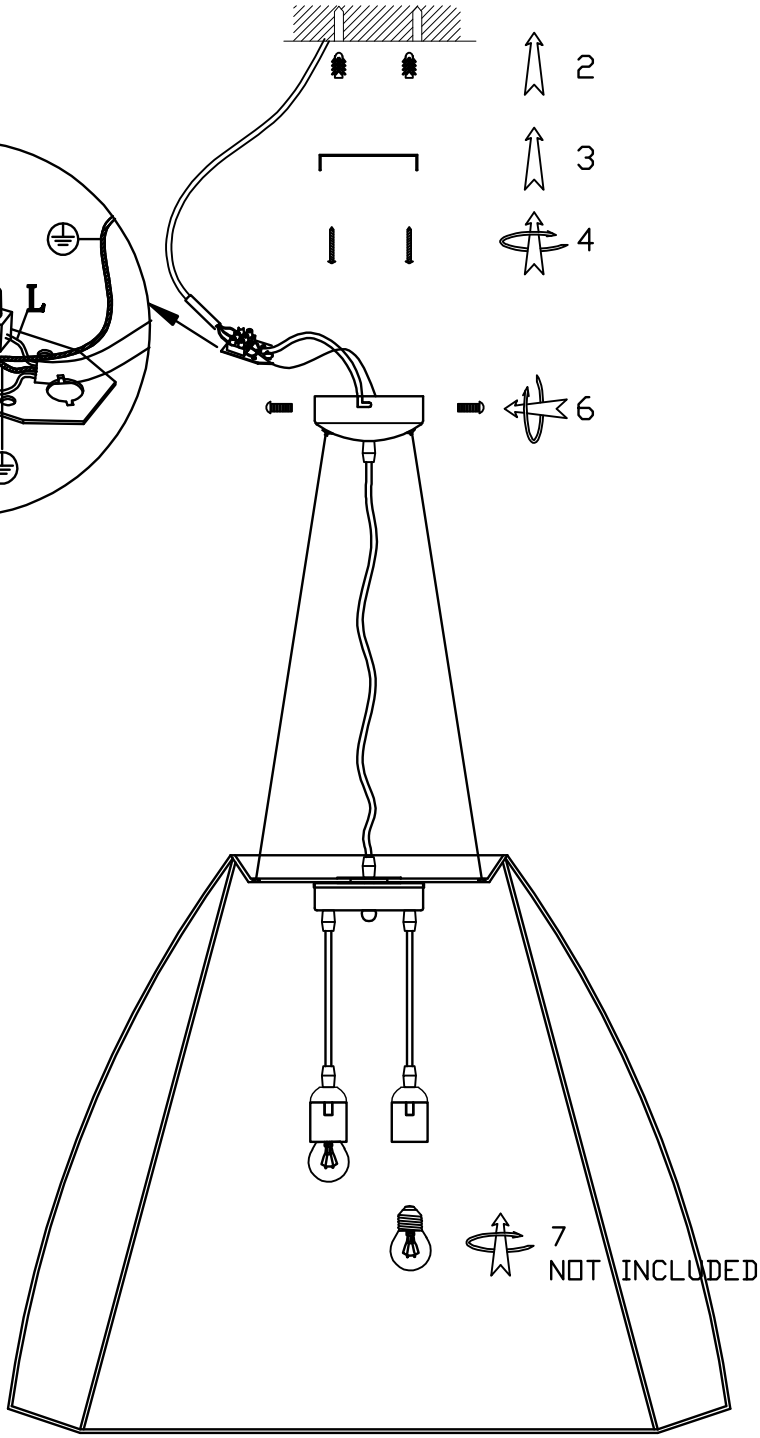

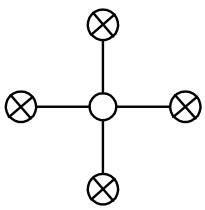

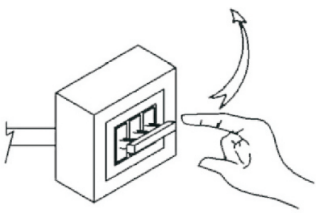

ON 8