ARTE

ASSEMBLY INSTRUCTIONS

A4021LM-8GO

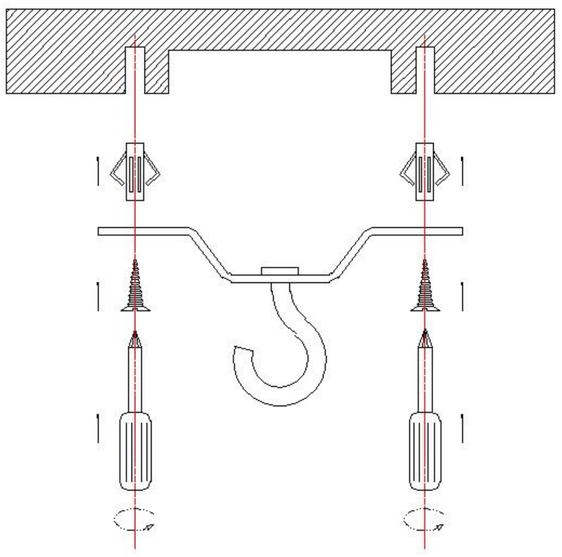

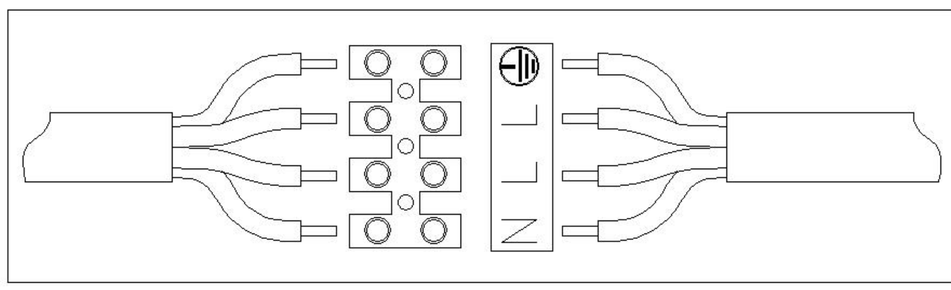

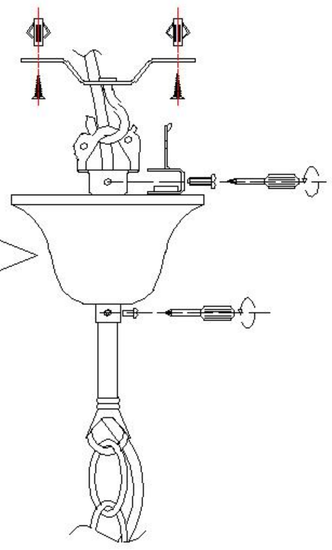
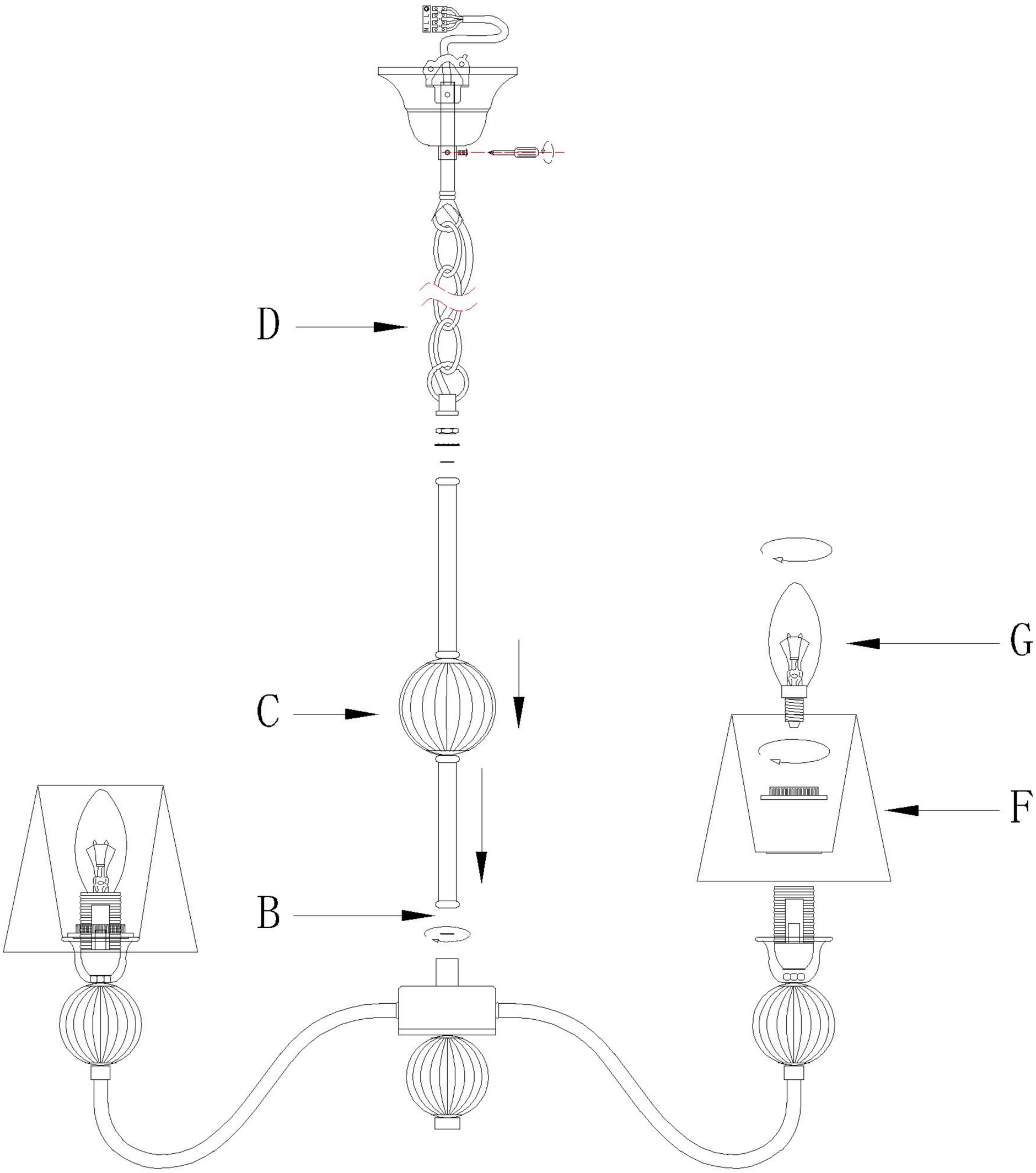
E